VIBRATION MANAGEMENT CORPORATION

5930 THOMAS ROAD , HOUSTON , TEXAS 77041 , U.S.A
INTERNET ADDRESS: www.vimco.biz

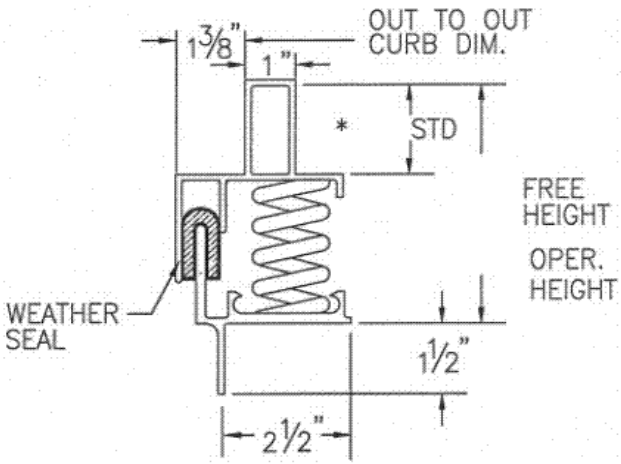

* UPTO " TOTAL AT ADDITIONAL COST

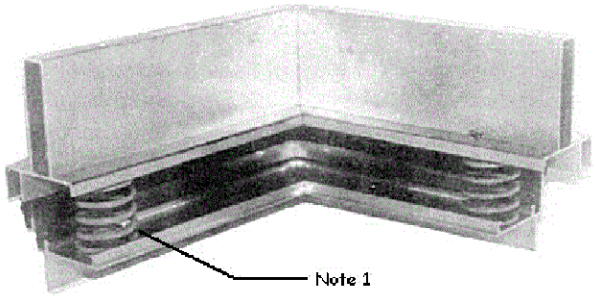

ROOF CURB DIMENSIONS

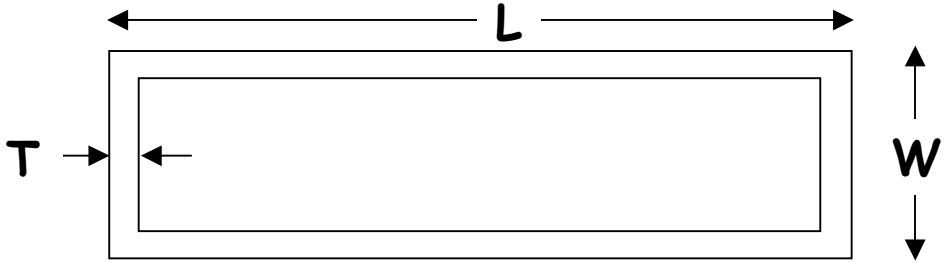

UNIT TAG	QTY	EQUIPMENT MAKE/MODEL	L	W	T	Shipping Sections

NOTE:

1 FREE STANDING AND STABLE SPRINGS SELECTED AND SPACED BY VIMCO TO PROVIDE DEFLECTION.

Notes / Remarks :	Project :		Title :	AR Isolation Rails	Drawing no. S-3000.11
	Client :				
	Consultant :				
	Representative :				Rev. 2